FIRST ANGLE PROJECTION (ALL DIMENSIONS IN MILLIMETRES)

DRAWING No. 2-80-999-99114

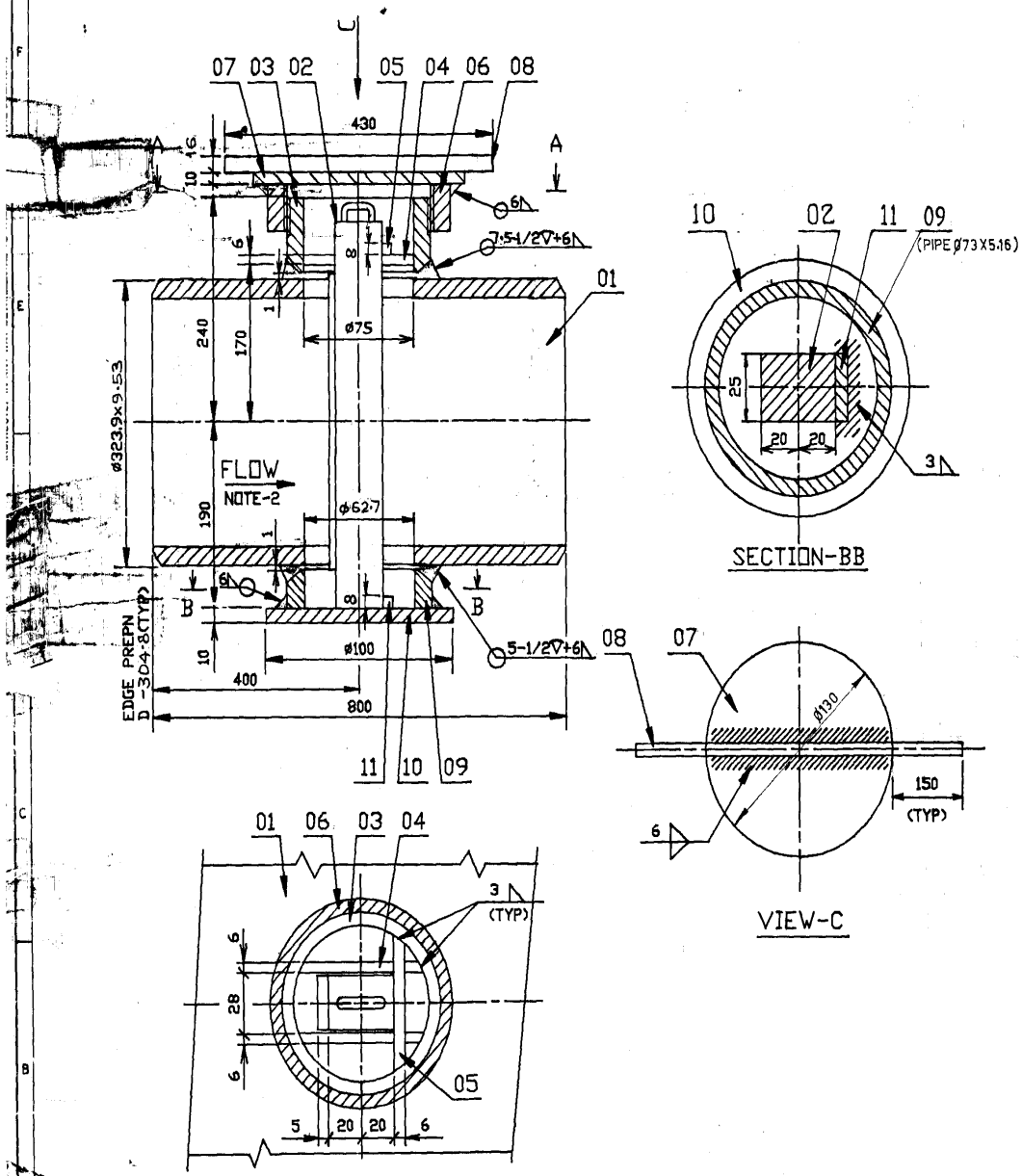

NOTES:
1) SMOOTH INSERTION OF TARGET HOLDER WITH PLATE(ITEM NO:02) MUST BE ENSURED SUCH THAT IT RESTS ON BOTTOM PLATE(ITEM NO:10) BUTTING AGAINST ITEM NOS:05 & 11. CARE MUST BE TAKEN WHILE WELDING ITEM NOS:04,05&11. ITEM NO.04 & 05 ARE TO BE CUT TO SUIT THE INNER SURFACE OF ITEM-03
2) FLOW DIRECTION MUST BE MARKED ON THE OUTER SURFACE OF MAIN PIPE (ITEM NO:01).
3) FOR SITE:PLASTIPEEL MUST BE REMOVED AT SITE BEFORE INSERTING TARGET HOLDER(ITEM NO:02) FOR STEAM BLOWING.

VAR NO	ITEM NO.	DESCRIPTION	DRAWING NO.	ITEM NO / VAR NO.	MATL CODE / MATERIAL	A / C	UNIT WT / QUANTITY
	11	PLATE 6 8x25	2 80 999 99114		15 011 092 BMC20		0.010 1
	10	PLATE 10 D100	2 80 999 99114		15 011 098 BMC20		0.600 1
	09	PIPE GUIDE Ø73X5.16	4 80 999 99034		15 082 042 SA 106 GRB	C	0.240 1
	08	ROD D16 L=430	2 80 999 99114		15 004 106 BMC20	C	0.700 1
	07	PLATE 10 D130	2 80 999 99114		15 011 098 BMC20		1.000 1
	06	PIPE WITH INTERNAL THREAD	4 80 999 99033		15 039 134 SA 105	C	[illegible]
	05	PLATE 6 8x64	2 80 999 99114		15 011 092 BMC20		[illegible]
	04	ROD D6 L=70	2 80 999 99114		15 004 026 BMC20		0.015 2
	03	PIPE WITH EXTERNAL THREAD	4 80 999 99032		15 039 134 SA 105	C	1.200 1
	02	TARGET PLATE HOLDER ASSY. NB.300.	3 80 999 99090	01	ASSY		3.371 1
	01	PIPE D323.9x9.53 L=800	2 80 999 99114		15 082 428 SA 106 GRB	C	59.004 1

TYPE OF PRODUCT OR NAME OF CUSTOMER/PROJECT: STANDARD

Bharat Heavy Electricals Ltd., PIPING CENTRE MADRAS-600 017.

	NAME	SIGN	DATE
DRN	R.ANANTHA		
CHD	NARAYANAN		
APPD	J.JUDE		

REV.	DATE	ALTERED / CHECKED
01		

ZONE

DEPT.	GRADE OF UNTOL. DIM.	SCALE	WEIGHT (Kg)	REF TO ASS'Y. OLD DRG.
CODE	C/M/F	NTS	66.779	

TITLE: TARGET PLATE ASSY NB 300

CARD CODE: U 01

DRAWING No: 2-80-999-99114